PARAGUARD EXTRUDED EDGE AT HG FASCIA

HEAVY GAUGE VERSION

ANSI/SPRI ES-1 DESIGN PRESSURE OF 365 psf

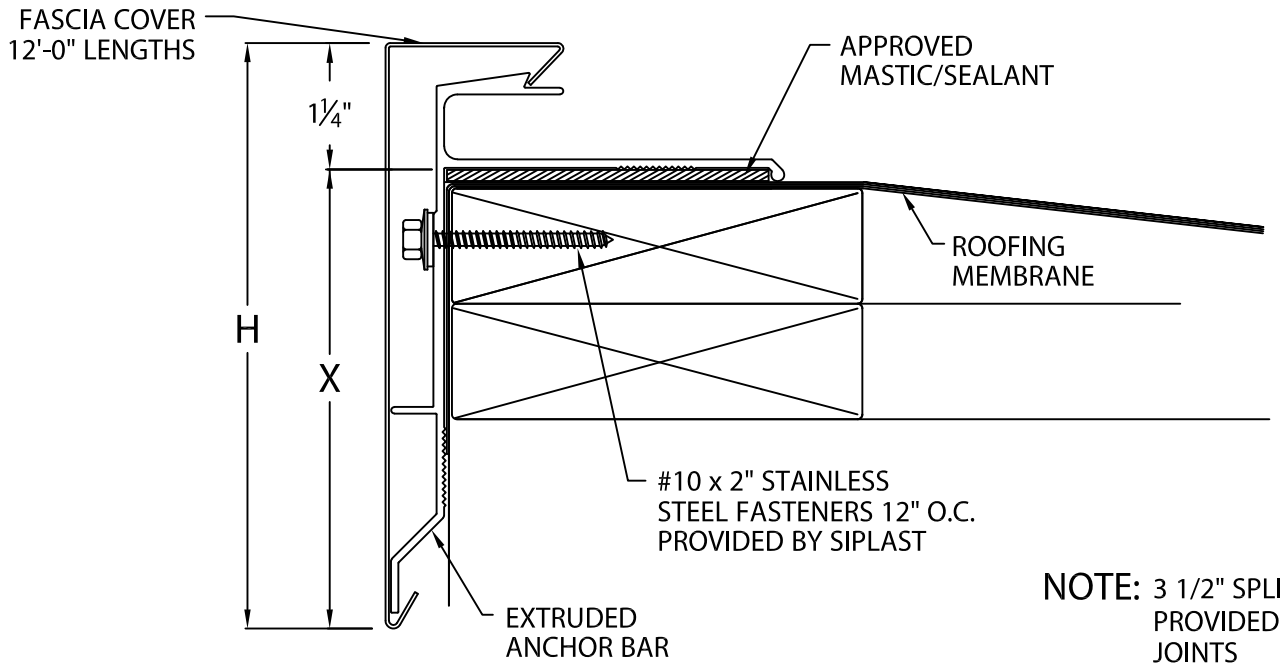

NOTE: 3 1/2" SPLICE PLATES PROVIDED AT ALL JOINTS

PARAGUARD EXTRUDED EDGE AT HG DIMENSIONS

PRODUCT ID. NO.	H DIM	X DIM	NAILER COVERAGE
☐ HG-AFM-55	5 1/2"	4 1/4"	2 NAILERS
☐ HG-AFM-70	7"	5 3/4"	3 NAILERS

MATERIAL:

☐ 22 GA. GALV. STEEL
☐ .050" ALUMINUM
☐ .063" ALUMINUM
☐ OTHER _____

COLOR:_____

FINISH:_____

Fabrication will proceed only after receipt of signed print approval.

Print Approval:

Contractor shall verify all dimensions, sizes and quantities. All products to be installed in strict accordance with Siplast's printed instructions.

Approved by: _____

Date: _____

QUANTITIES:

_____ LINEAL FEET 12'-0" LENGTHS

_____ OUTSIDE MITER(S) @ 90°

_____ INSIDE MITER(S) @ 90°

_____ OVERFLOW SCUPPER(S) STYLE____A____B

_____ SPILLOUT SCUPPER(S) STYLE____A____B

_____ DOWNSPOUT SCUPPER(S) STYLE____A____B

(_____X_____) SIZE

A: TAPERED 1 1/2" DROP
B: FLAT

FOR NON-90 MITERS SEE PRINT APPROVAL #44010-15636

PROJECT:

ROOFING CONTRACTOR:

SHIP TO ADDRESS:

CITY, STATE, ZIP:

PHONE: 800-922-8800

EMAIL: PGUARD@SIPLAST.COM

siplast®

DATE: 12/07/18

DRN BY: JJC

CKD BY: SAK

SHT.#____ OF ____

DWG# 44010-15644

G